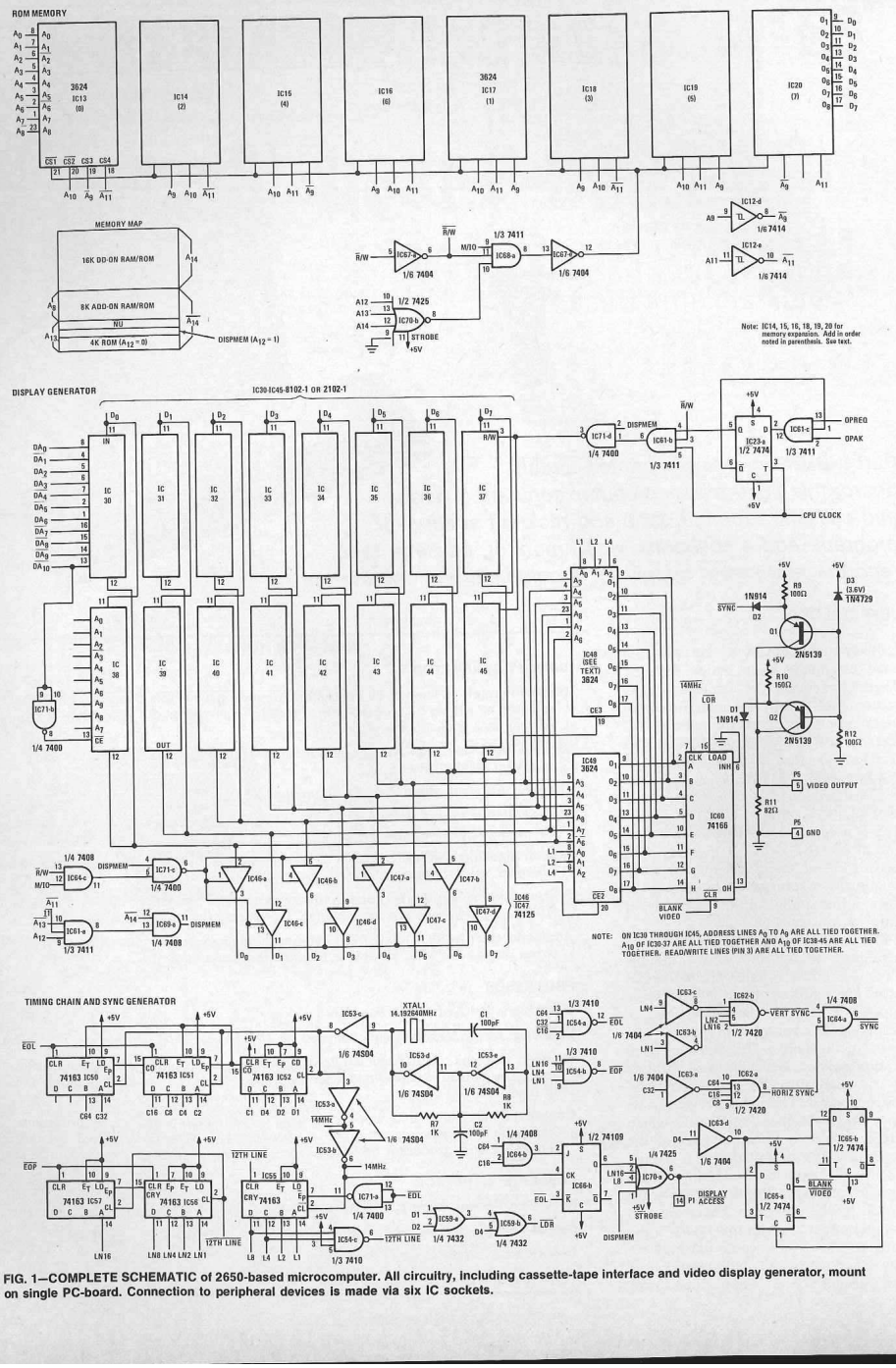
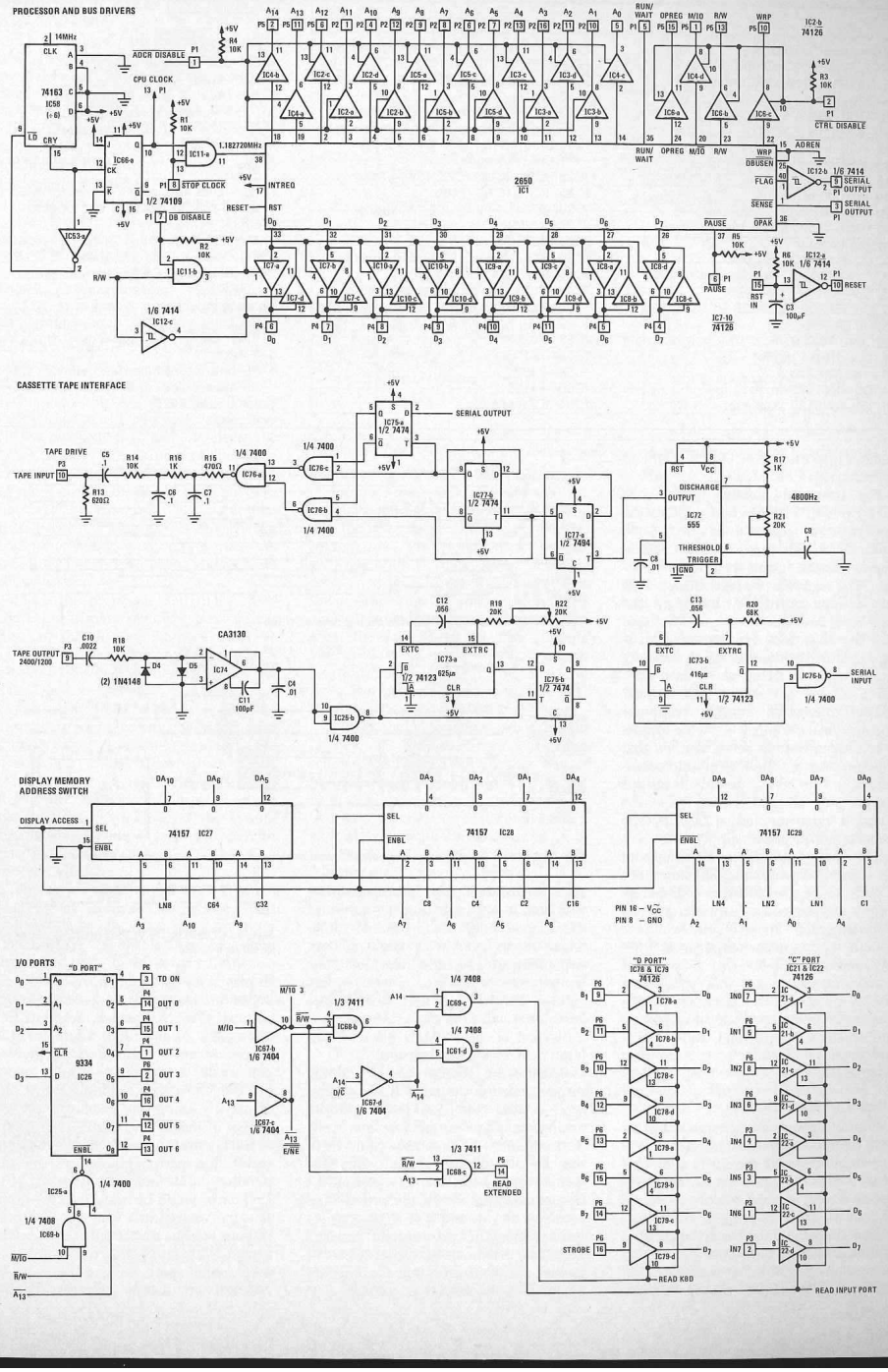
FIG. 1—COMPLETE SCHEMATIC of 2650-based microcomputer. All circuitry, including cassette-tape interface and video display generator, mount on single PC-board. Connection to peripheral devices is made via six IC sockets.